SW SERIES
T-STRAINER (WELDING)

SWD-A

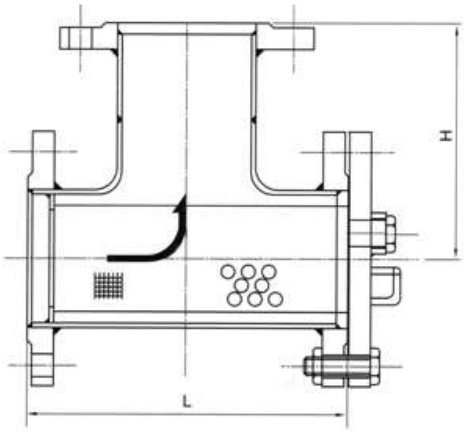

PARTS OF MATERIAL

PARTS NAME	MATERIALS
BODY	TP304.SS
COVER	STS304.SS
SCREEN	STS304
CASKET	TEFLON
FLANGES	STS304.SS
DRAIN PLUG	F304.A105
BOLT&NUT	STS304.B7.2H

SWD-B

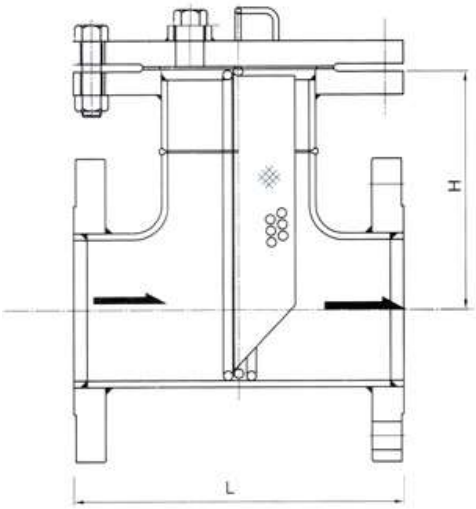

PARTS OF MATERIAL

PARTS NAME	MATERIALS
BODY	TP304.CF8.8M.SS
COVER	STS304.SS
SCREEN	STS304.316
CASKET	TEFLON
FLANGES	STS304.SS
DRAIN PLUG	F304.A105
BOLT&NUT	STS304.B7.2H

DIMENSION

단위(mm)

SIZE	in	1	11/2	2	2/12	3	4	5	6	8	10	12	14	16	18	20	24
	mm	25	40	50	65	80	100	125	150	200	250	300	350	400	450	500	600
10K150LB	L	200	252	268	306	332	382	446	484	578	668	770	846	974	1080	1165	
	H	100	126	134	153	166	191	223	342	289	334	385	423	487	540	583	
	PLUG(PT)	1/2"	1/2"	1/2"	1/2"	1/2"	1/2"	3/4"	3/4"	3/4"	3/4"	3/4"	3/4"	3/4"	3/4"	3/4"	